Paper presentation – Ultra-Portable Devices

Paper:

Xiongchuan Huang, Simonetta Rampu, et al.
A 2.4GHz/915MHz 51µW Wake-Up Receiver with Offset and Noise Suppression.
ISSCC, pp. 222-223, feb 2010.

Presented by:

Carl Bryant goes here

Outline

- Introduction
- Double sampling
- Receiver
- Results
- Conclusions

Introduction

- For wireless sensor networks
- Always-on receiver monitors link
- Requires very low power consumption

- Envelope detector popular choice
  - Attenuates low level signals
  - Adds excessive noise

- Gain before detector improves SNR
  - LNA consumes additional power
  - Masking 1/f noise requires a lot of gain

Double sampling

- Double sampling
  - Sample detector output twice
  - Once with signal, once without signal
  - Subtract one from the other

- Cancels offset and LF noise

Receiver

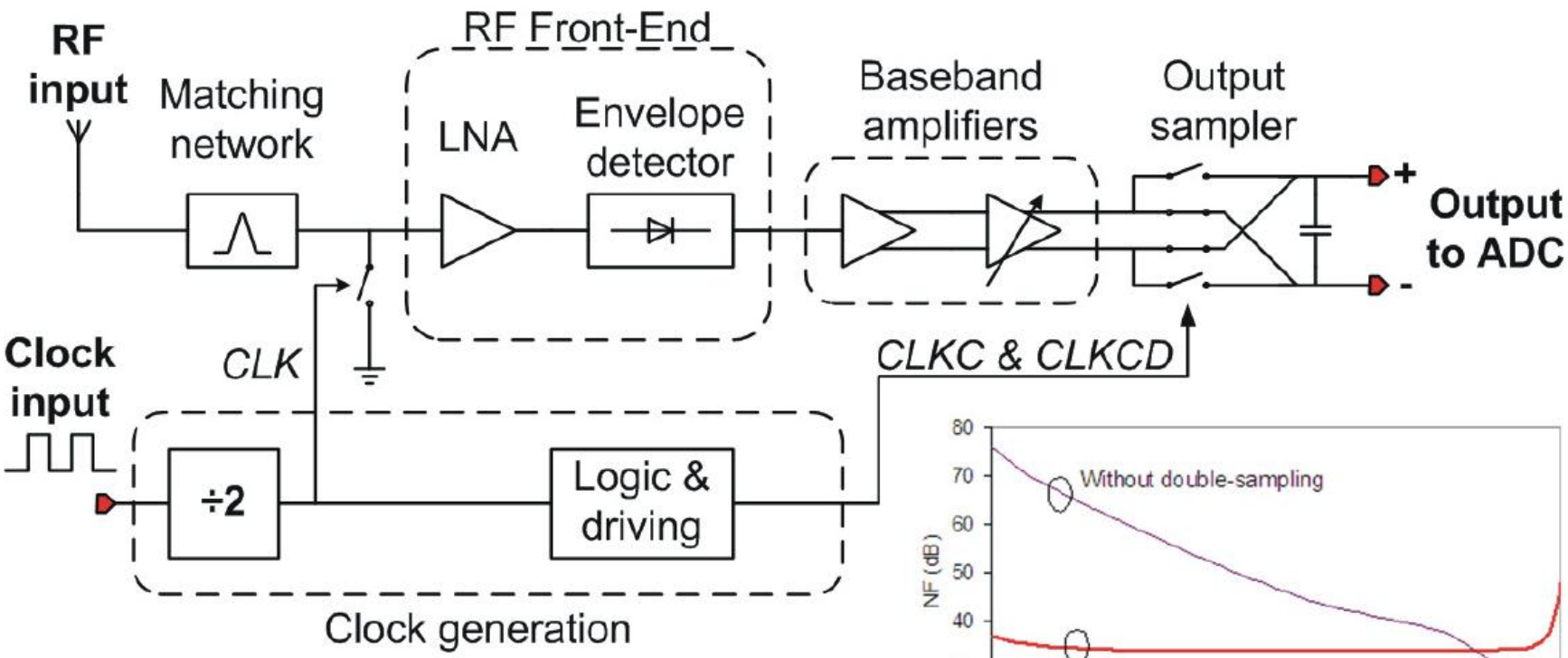

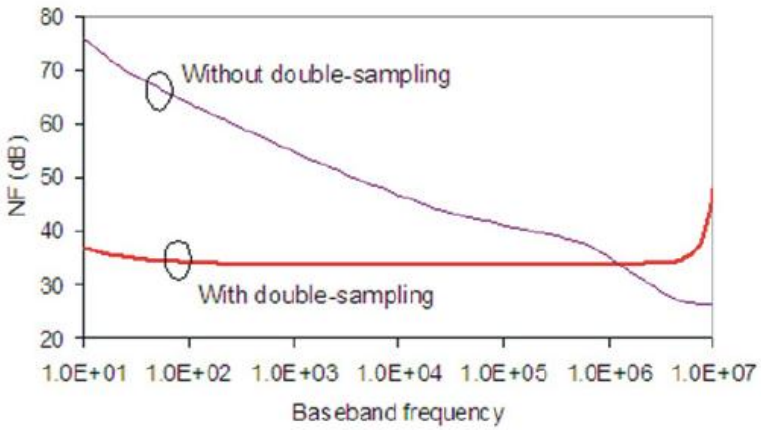

- Step one: Sample output with signal
- Step two: Subtract noise of receiver (no signal)

Receiver

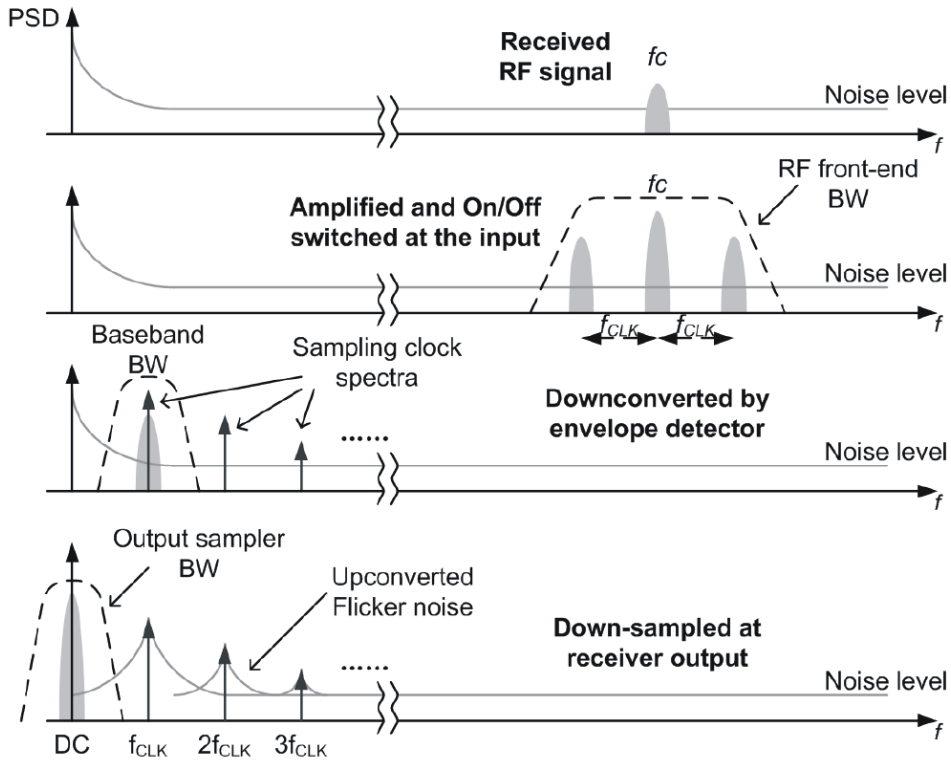

- Sampling at frequency f_{CLK}
- Output from envelope detector at f_{CLK}
  - *Avoids 1/f noise in detector & gain stages*
- Sampled back to DC
  - 1/f noise & offset converted to multiples of f_{CLK}

Receiver

- 90nm CMOS
- RF amplifier optimized for gain (over NF)
- High Q off-chip inductors to maintain high voltage gain
- No DC reference required for detector (output at f_{CLK})
- Most gain in baseband amplifiers
- 0.5V Vdd (analog part)

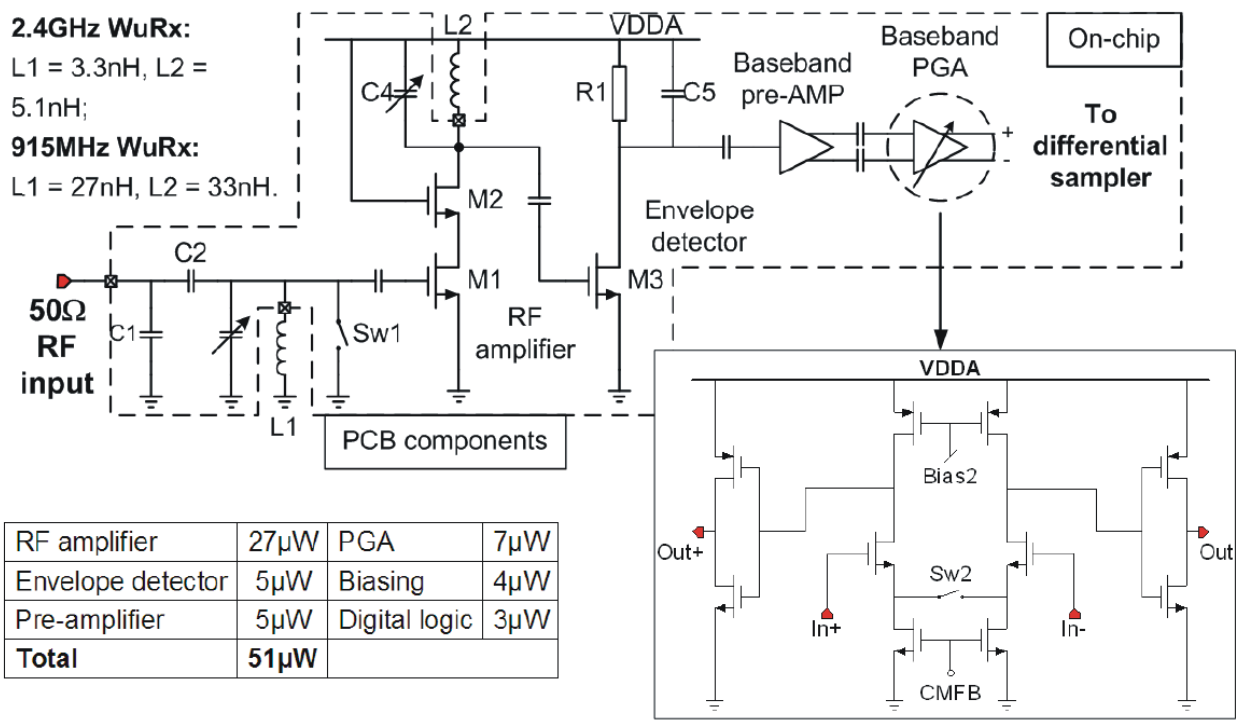

RF amplifier	27μW	PGA	7μW
Envelope detector	5μW	Biasing	4μW
Pre-amplifier	5μW	Digital logic	3μW
Total	**51μW**		

Receiver

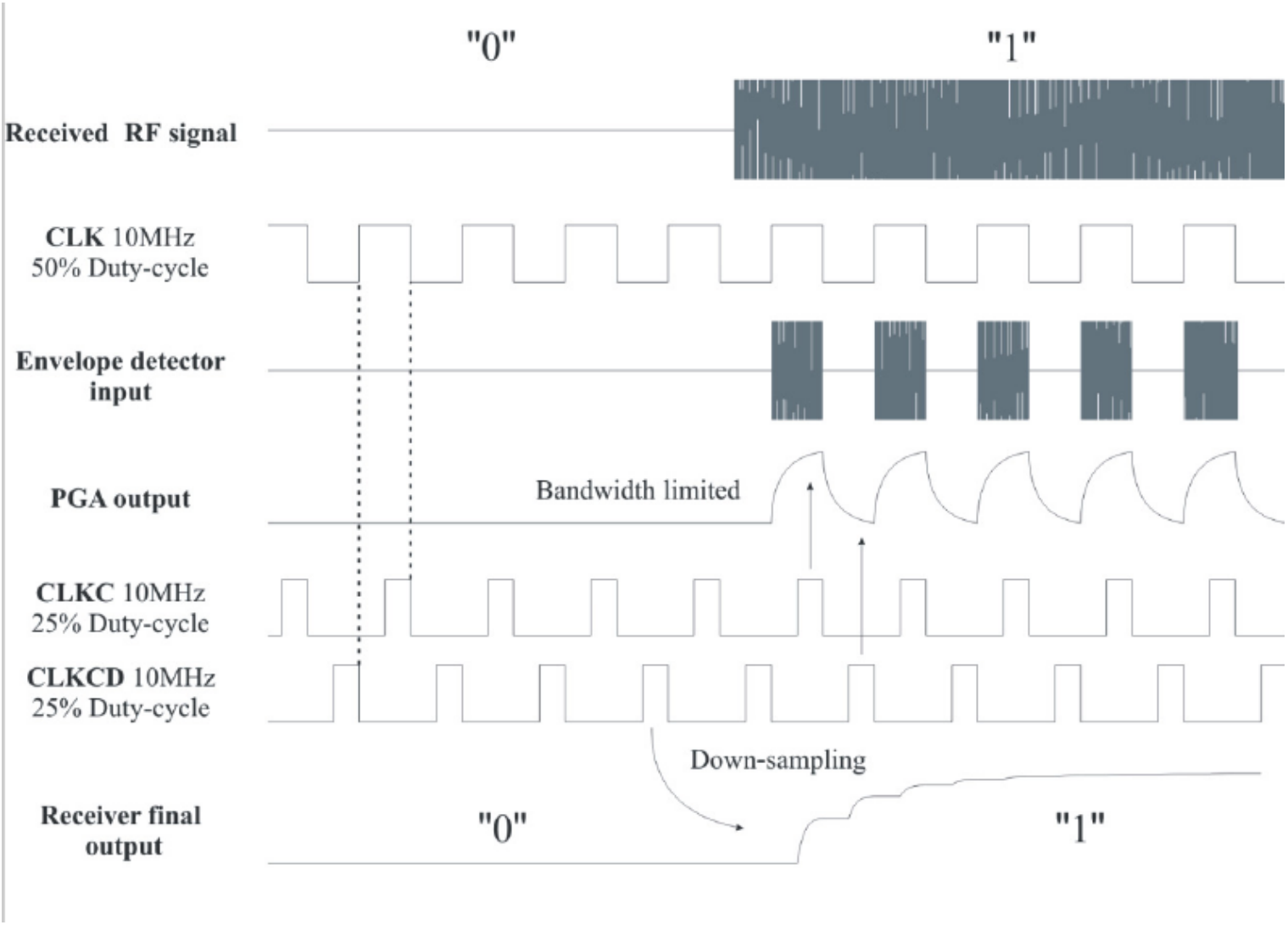
"0"
"1"
Received RF signal
CLK 10MHz
50% Duty-cycle
Envelope detector input
PGA output
Bandwidth limited
CLKC 10MHz
25% Duty-cycle
CLKCD 10MHz
25% Duty-cycle
Down-sampling
Receiver final output
"0"
"1"

Results

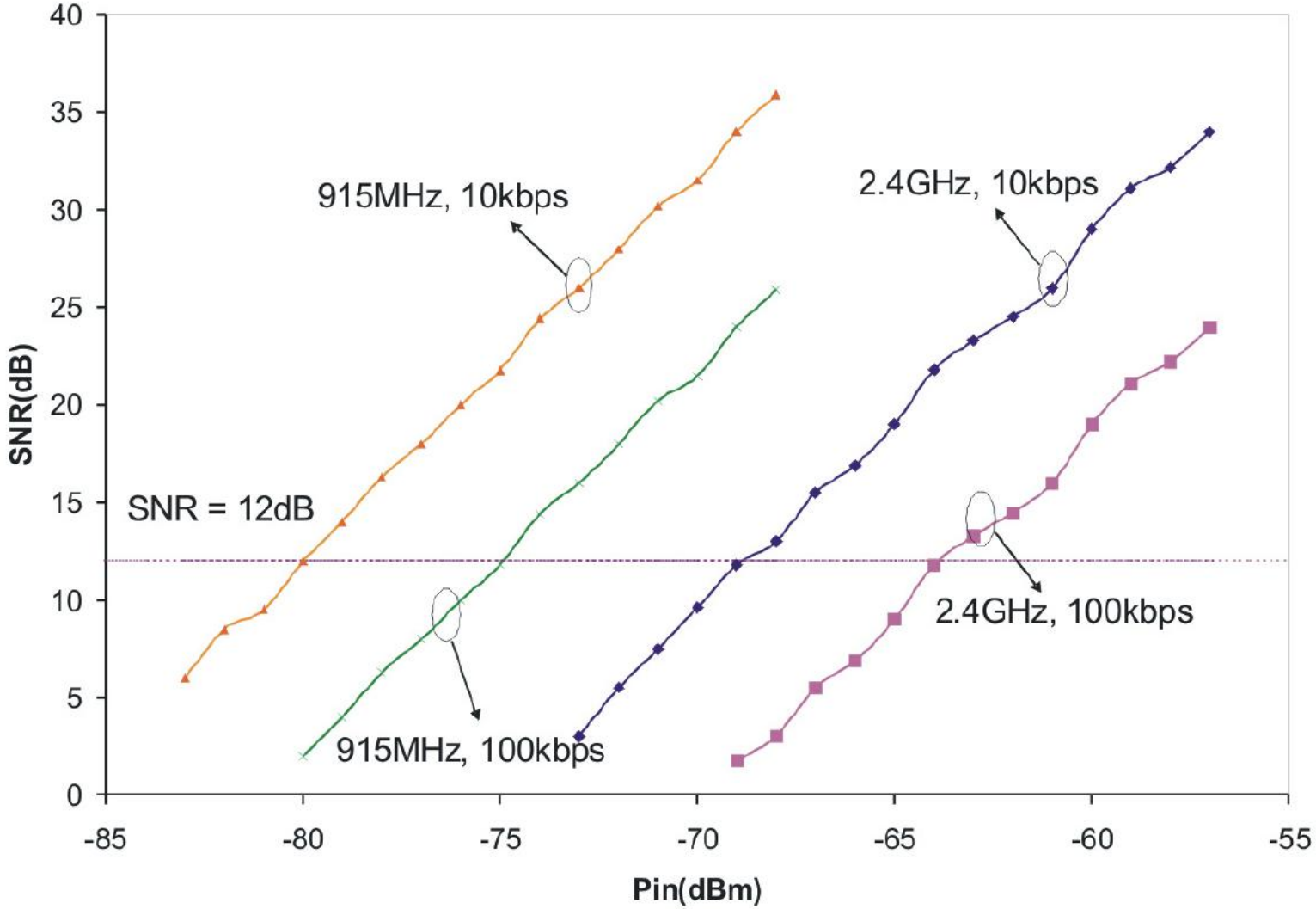
40
35
30
25
20
15
10
5
0
SNR(dB)
-85
-80
-75
-70
-65
-60
-55
Pin(dBm)
915MHz, 10kbps
2.4GHz, 10kbps
SNR = 12dB
2.4GHz, 100kbps
915MHz, 100kbps

Results

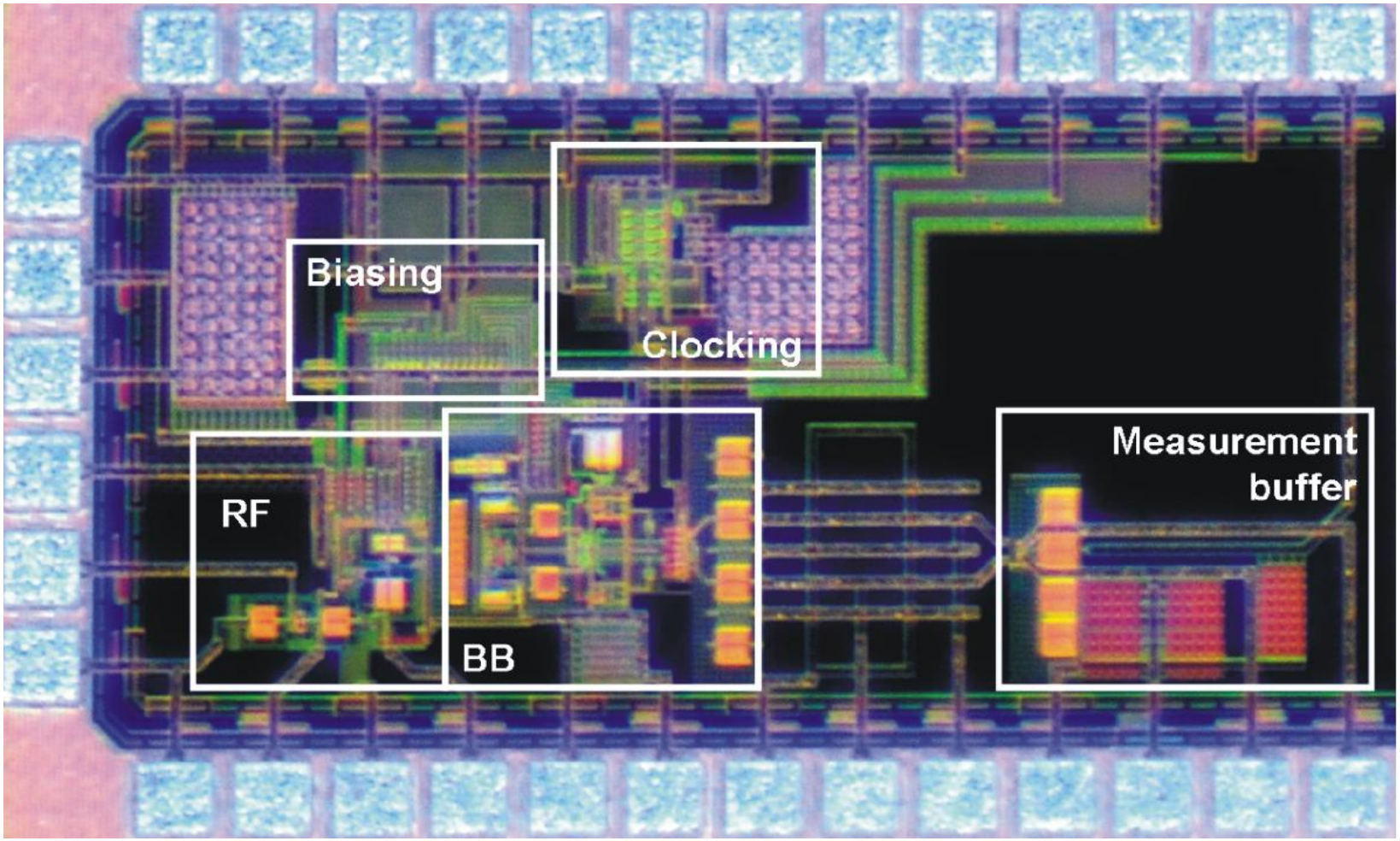

- Mounted in QFN56 package

Conclusions

- Double sampling considerably lowers low frequency NF & offset
- Cheap and simple implementation

- 50µW OOK receiver demonstrated

Discussion

- How is input impedance affected by sampling?