Selected answers*
Problem set 1

Wireless Communications, 2nd Ed.

4.1 Antenna gain

Antenna gain can be calculated as the ratio between the antenna's effective area and the effective area of the isotropic antenna. The parabolic antenna has, according to the problem statement, an effective area of 55% of its physical opening area. The effective area of the isotropic antenna is $\lambda^2/4\pi$. Hence, the **antenna gain** of the parabolic antenna is

$$G = \frac{0.55\pi r^2}{\lambda^2/4\pi} = 2.2\left(\frac{\pi r}{\lambda}\right)^2. \tag{1}$$

4.2 Satellite link

a) At a distance of 35,000 km and a carrier frequency of 11 GHz, the free space propagation loss is

$$L_{\text{free}} = \left(\frac{4\pi d}{\lambda}\right)^2 = \left(\frac{4\pi \times 35 \times 10^6}{3 \times 10^8/11 \times 10^9}\right)^2 = 2.6 \times 10^{20} = 204 \text{ dB} \tag{1}$$

The rest of the data needed to draw a link budget is given in the problem statement. The **link budget** from the satellite to the ground station becomes:

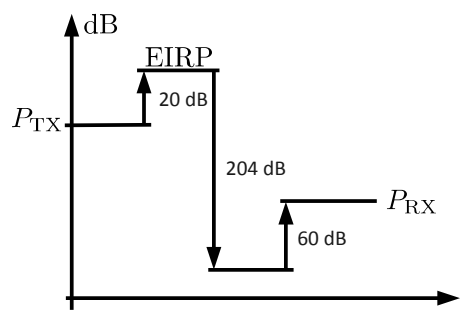

b) With $P_{\text{RX}} = -120 \text{ dBm}$, the link budget gives us a **required transmit power**

$$P_{\text{TX}} = P_{\text{RX}} - 60 + 204 - 20 = -120 + 124 = 4 \text{ dBm} \tag{2}$$

4.3 Antenna gain calculations

a) Friis' law can be used if the antennas are “far enough” apart. One distance to compare against is the Rayleigh distance, which in this case is

$$d_R = 2\frac{L_a^2}{\lambda} = 2\frac{15^2}{3 \times 10^8/10^9} = 1500 \text{ m}. \tag{1}$$

The 90 m distance considered is way below the Rayleigh distance. **We cannot expect Friis' law to work well**. Let's see …

* Note: Solutions provided here are less detailed than the ones expected during the exam. Many steps are excluded.

b) The antenna gains are

$$G_{TX} = G_{RX} = 2.2\left(\frac{\pi r}{\lambda}\right)^2 = 41.3 \text{ dB} \tag{2}$$

and the free space loss

$$L_{\text{free}} = \left(\frac{4\pi d}{\lambda}\right)^2 = 71.5 \text{ dB}. \tag{3}$$

If we assume that Friis' law is valid, the received power at the **output power** of the receiving antenna becomes

$$P_{RX} = P_{TX} + G_{TX} - L_{\text{free}} + G_{RX} = P_{TX} + 11.1 \text{ dB}. \tag{4}$$

This result can obviously not be true, since it implies that an entirely passive system delivers 11.1 dB more power on its output than what is put into the system.

c) Using the formula for antenna gain for the parabolic antenna, we get an aperture (diameter)

$$L_a = \sqrt{\frac{G}{0.55}}\frac{\lambda}{\pi} \tag{5}$$

which we can insert into the formula for the Rayleigh distance and get

$$d_R = 2\frac{L_a^2}{\lambda} = 2\frac{\lambda G}{0.55\pi^2} = 0.37\lambda G. \tag{6}$$

[4.9] Exposure to electromagnetic waves

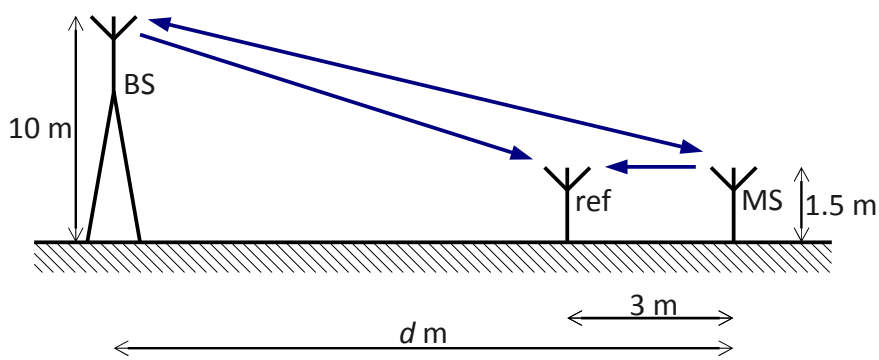

The three propagation losses needed are

$$L_{\text{BS,MS}} = 40\log_{10} d - 23.5 \text{ dB} \tag{1}$$

$$L_{\text{BS,ref}} = \frac{(d-3)^4}{10^2 1.5^2} = 40\log_{10}(d-3) - 23.5 \text{ dB} \tag{2}$$

$$L_{\text{MS,ref}} = \left(\frac{12\pi}{3\times 10^8/900\times 10^6}\right)^2 = 41.1 \text{ dB} \tag{3}$$

a) Using simple link budget calculations, the power expressions become

i. $P_{\text{TX,BS}} = P_{\text{RX,MS}}^{\min} + 40\log_{10} d - 31.5 \text{ dB}$

ii. $P_{\mathrm{TX,MS}} = P_{\mathrm{RX,MS}}^{\mathrm{min}} + 40\log_{10} d - 41.5 \text{ dB}$

iii. $P_{\mathrm{RX,ref}}^{\mathrm{BS}} = P_{\mathrm{RX,MS}}^{\mathrm{min}} + 40\log_{10} \dfrac{d}{d-3} - 2 + G_{\mathrm{ref}} \text{ dB}$

iv. $P_{\mathrm{RX,ref}}^{\mathrm{MS}} = P_{\mathrm{RX,MS}}^{\mathrm{min}} + 40\log_{10} d - 80.6 + G_{\mathrm{ref}} \text{ dB}$

b) The difference (in dB) between $P_{\mathrm{RX,ref}}^{MS}$ and $P_{\mathrm{RX,ref}}^{BS}$ as a function of distance is

$$P_{\mathrm{RX,ref}}^{MS} - P_{\mathrm{RX,ref}}^{BS} = 40\log_{10}(d-3) - 78.6 \tag{4}$$

which, plotted between 5 m and 5 km, is shown below.

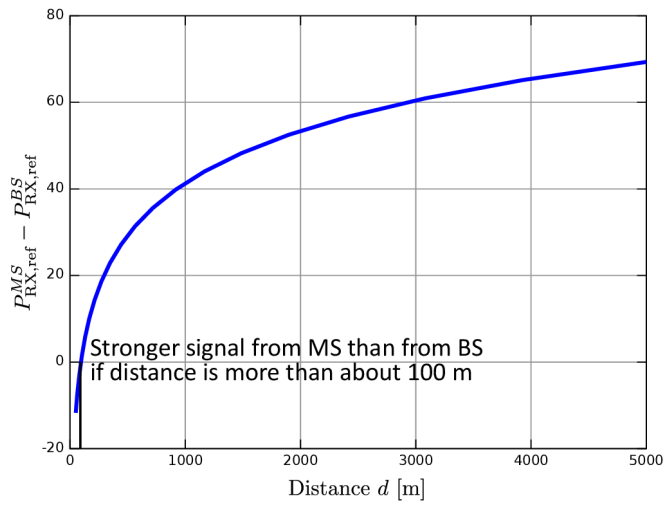

If distances are beyond about 100 m the “exposure” to electromagnetic waves from the MS is higher than from the BS. At 5000 m the “exposure” from the MS is about 7 orders of magnitude higher than from the BS.