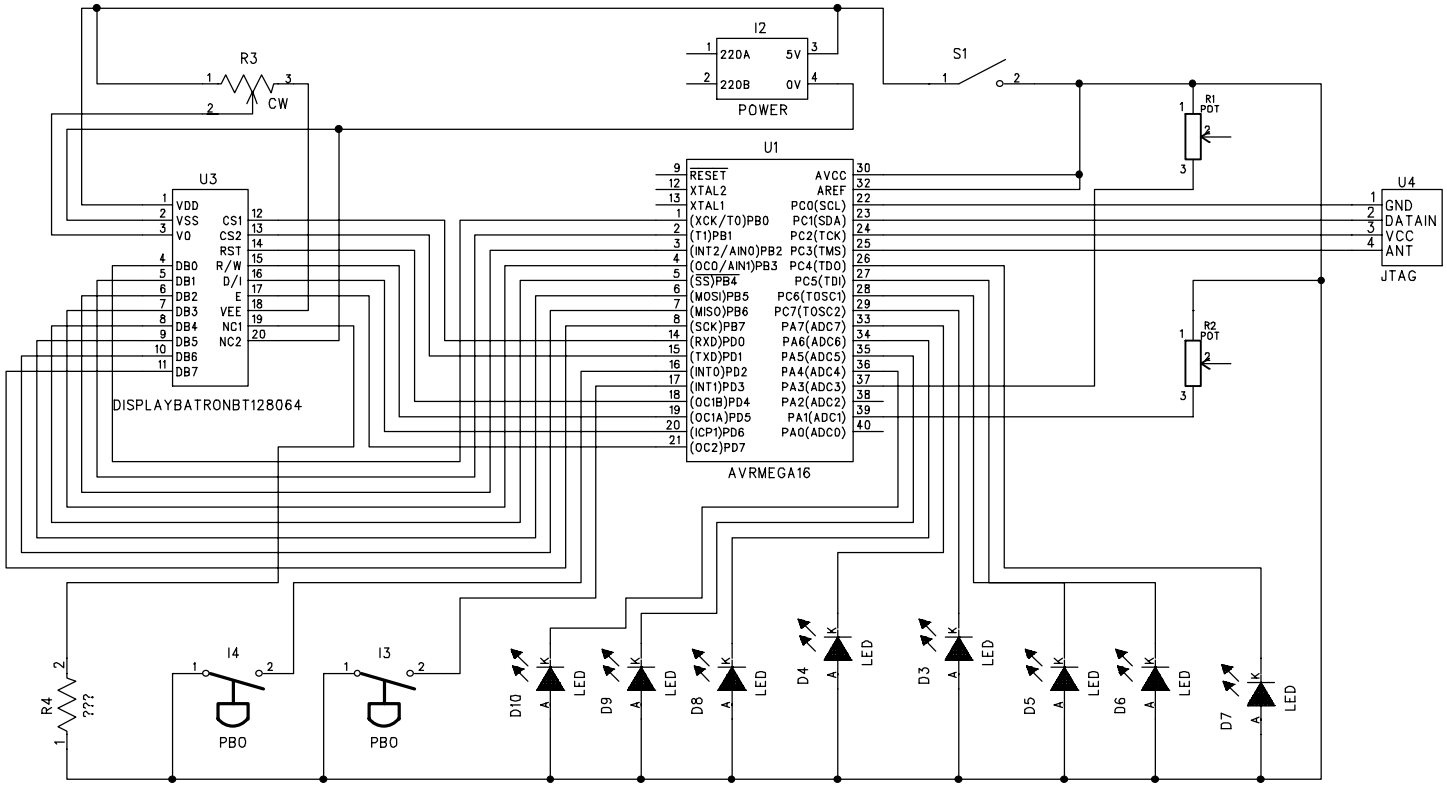PDF-XChange Click to buy NOW! www.tracker-software